Machine Translated by Google

Nanjing Tuowei Integrated Circuit Co., Ltd.

NanJing Top Power ASIC Corp.

Data Sheet

DATASHEET

TP4057

(500mA Linear Li-Ion Battery Charger)

Overview, features, typical applications----------P2 Pins, characteristic indicators----------P3 Pin function description----------P5 Charging current setting, battery reverse connection protection function----------P7 Charging indication status, no battery connection indication status----------P8 Various typical application diagrams, usage precautions----------P12

Machine Translated by Google

拓微集成
Top Power ASIC

TP4057
采用SOT23封装
500mA防锂电池反接充电器

DescriptionTP4057 is **a complete single-cell lithium-ion battery charger with reverse polarity protection and constant current /**constant voltage linear control. Its SOT **package and small number of external components make** TP4057 an **ideal choice for portable applications .** TP4057 **can work with** USB **power supply and adapter power supply.**

Due to the internal PMOSFET **architecture and anti-reverse charging circuit, no external detection resistor and isolation diode are required. Thermal feedback can automatically adjust the charging current to limit the chip temperature under high power operation or high ambient temperature conditions. The full voltage is fixed at 4.2V, and the charging current can be set externally through a resistor. When the battery reaches** 4.2V , the charging current drops to 1/10 **of the set value ,** and the TP4057 **will automatically terminate charg**

When the input voltage (AC adapter or USB **power supply) is removed, the TP4057 automatically enters a low current state with battery leakage current below** 2uA . **Other features of the TP4057 include charge current monitor, undervoltage lockout, automatic recharge and two status pins for indicating the end of charging and input voltage access.**

Features · Lithium battery reverse polarity protection; · Up to 500mA programmable charge current; · No MOSFET, sense resistor or isolation diode required; · For single-cell Li-ion batteries · Constant current/constant voltage operation with thermal regulation to maximize charge rate without risk of overheating;

·Charges single-cell Li-Ion battery directly from USB port ·4.2V preset charge voltage with ±1% accuracy ·Up to 9V input ·Automatic recharge ·2 open-drain output pins for charge status

·C/10 charge termination ·40uA supply current in standby mode ·2.9V trickle charge device version

·Soft start limits inrush current

·Used in 6-pin SOT-23 package. Absolute Maximum Ratings ·Input supply voltage (VCC): -0.3Vÿ9V

PROG: -0.3VÿVCC+0.3V

BAT: -4.2Vÿ7V

·CHRG : **-0.3Vÿ10V** ·BAT **short circuit duration: continuous** ·BAT **pin current: 500mA** ·PROG **pin current: 800uA ·Maximum junction temperature: 145ÿ**

·Operating ambient temperature range: -40ÿÿ85ÿ

·Storage temperature range: -65ÿÿ125ÿ ·Pin temperature (soldering time 10 seconds): 260ÿ

Applications

Charging station Cell phones, PDAs, MP3 players

Bluetooth applications Typical applications 500mA **single-cell Li-ion battery charger**

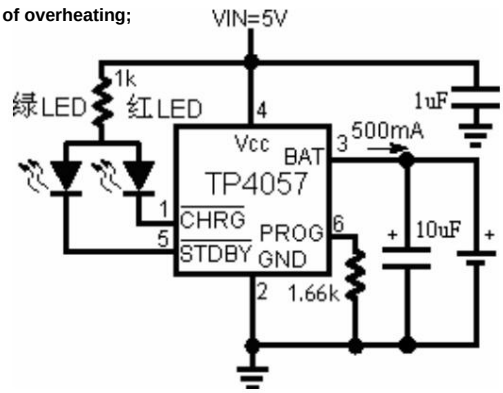

400mA current complete charging cycle (600mAh)

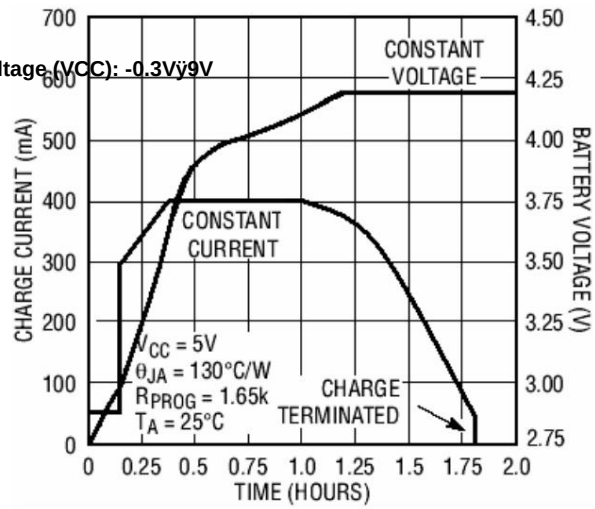

Machine Translated by Google

Packaging/Ordering Information

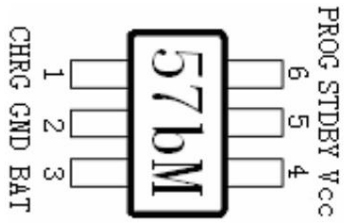

6- **lead plastic** SOT-23-6 **package**

Order Model
TP4057-42-SOT26-R
Device marking
57bm (m **is the production batch number, variable)**

Electrical properties

Note • in the table indicates that the indicator is suitable for the entire operating temperature range, otherwise it only refers to TA=25ÿ, VCC=5V, unless otherwise specified.

symbol	parameter	condition		Min	Typ	Max	Unit
VCC	**Input power voltage**		•	4.0	5	9.0	V
ICC	**Input power current**	Charging mode, RPROG=10K	•		150	500	ÿA
		Standby mode (charge termination)	•		40	100	ÿA
		Stop mode (RPROG not connected,	•		40	100	ÿA
		VCC < VBAT, or VCC < VUV)			40	100	
VFLOAL	**stable output (floating charge) voltage**	**0ÿÿTAÿ85ÿ,** IBAT=40mA		4.158	**4.2**	4.242	V
IBAT	BAT **pin current** **(Except for instructions,** Vbat=4.0v)	RPROG=10K, current mode	•	90	100	110	mA
		RPROG=2K, current mode	•	380	400	420	mA
		RPROG=1.6K, current mode	•	480	500	520	mA
		Standby mode, VBAT = 4.2V			-2.5	-6	ÿA
		shutdown mode (RPROG not connected)			±1	±2	ÿA
		Sleep mode, VCC = 0V			-1	-2	ÿA
ITRIKL	**Trickle charge current**	VBAT < VTRIKL, RPROG = 10K • 10 **Trickle charge**			15	20	mA
VTRIKL	**threshold voltage** RPROG = 10K, VBAT rises **Trickle charge**			2.8	2.9	3.0	V
VTRHYS	**hysteresis voltage** RPROG = 10K **VCC**			60	80	100	mV
VUV	**undervoltage lockout threshold from VCC low to**		•	3.4	3.6	3.8	V
VUVHYS	**high VCC undervoltage lockout hysteresis**		•	150	200	300	mV
VMSD	**Manual shutdown threshold voltage**	PROG **pin level rises**	•	3.40	3.50	3.60	V
		PROG **pin level drops**	•	1.90	2.00	2.10	V
VASD	VCC-VBAT lockout threshold voltage	**VCC from low to high**		60	100	140	mV
		VCC from high to low		5	30	50	mV
ITERM	C/10 **Termination Current Limit**	RPROG=10K	•	8	10	12	mA
		RPROG=1.66K	•	30	40	50	mA
VPROG	PROG **pin voltage** RPROG = 10K, current mode		•	0.9	1.0	1.1	V
$I_{\overline{CHG}}$	$\overline{CHRG}$ **Pin Leakage Current**	$V_{\overline{CHG}}$ **=5V (standby mode)**			0	1	ÿA
$V_{\overline{CHRG}}$	$\overline{CHRG}$ **pin output low voltage**	$I_{\overline{CHG}}$ =5mA			0.3	0.6	V

Machine Translated by Google

I_{STDBY}	$\overline{STDBY}$ **Pin leakage current**	VSTDBY = **5V (standby mode)**			0	1	ÿA
VSTDBY	$\overline{STDBY}$ **Pin output low level**	I =5mA STDBY			0.3	0.6	V
ÿVRECHRG **recharge battery threshold voltage**		VFLOAT-VRECHRG		100	150	200	mV
TLIM **defines the junction temperature in**					120		**ÿ**
RON	**temperature mode. Power FET "on" resistance** **(Between** VCC and BAT)				650		**mÿ**
tss **Soft-start time**		IBAT = 0 **to** IBAT = 1000V/RPROG			20		ms
tRECHARGE **Recharge comparator filter time**		VBAT high to low		0.8	1.8	4	ms
tTERM **Termination comparator filter time**		IBAT drops **below** ICHG/10		0.8	1.8	4	**ms**
IPROG PROG **pin pull-up current**					2.0		ÿA

Typical performance characteristics

Relationship curve between PROG pin voltage and power supply voltage **in constant current mode**

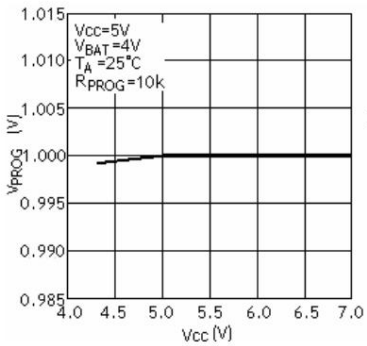

PROG **pin voltage vs. temperature**

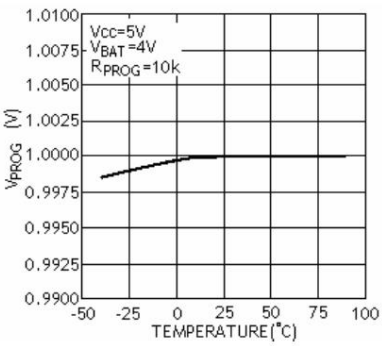

The charge current is related to the PROG **pin voltage. Pressure relationship curve**

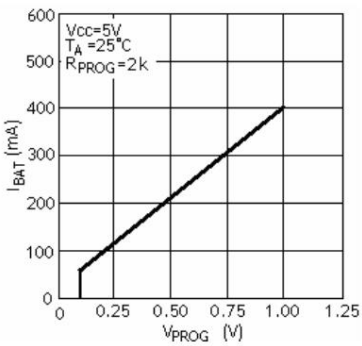

Relationship curve between stable output (floating charge) voltage and charging current

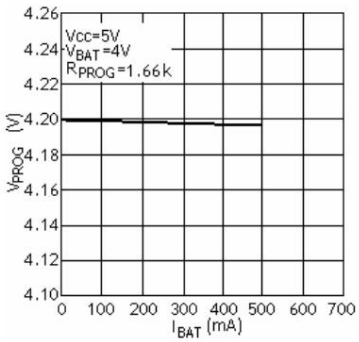

Relationship curve between stable output (floating charge) voltage and temperature

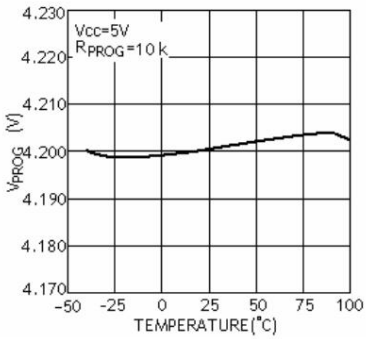

Stable output (floating charge) voltage and Pressure relationship curve

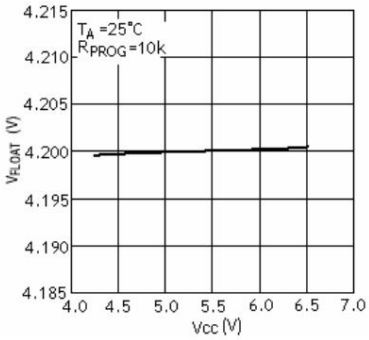

Machine Translated by Google

The relationship between trickle charge threshold and temperature and battery voltage

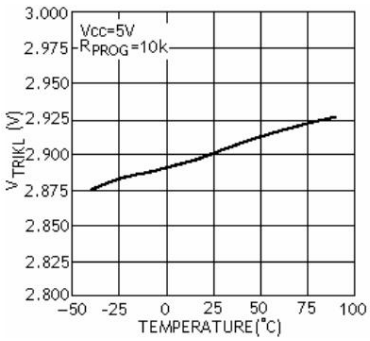

The relationship between charging current curve

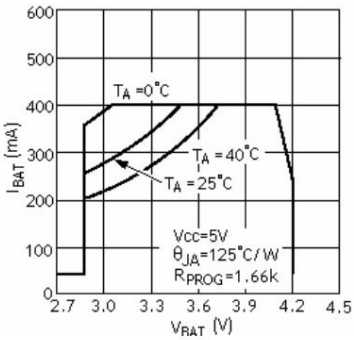

Charging current and power supply voltage curve

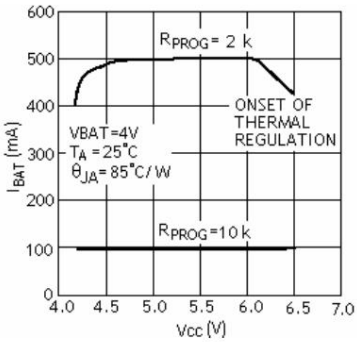

Charging current and ambient temperature curve

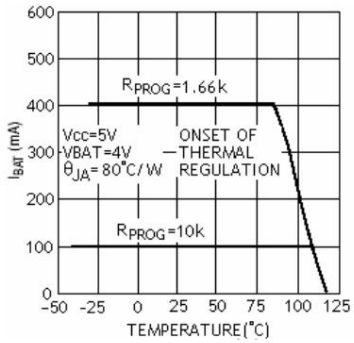

Relationship curve between recharge voltage threshold and temperature

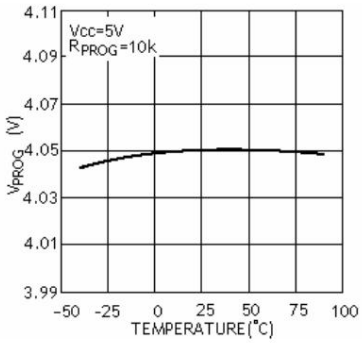

Power FET "on" resistance vs. temperature

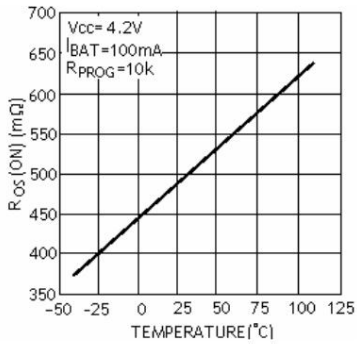

Pin Function

CHRG **(pin 1): open-drain output charging status indicator. When the charger is charging the battery, the CHRG pin is pulled low by the internal switch, indicating that charging is in progress; otherwise, the CHRG pin is in a high impedance state.**

GND (Pin 2): Ground BAT

(Pin 3): Charge Current Output. This pin provides charge current to the battery and regulates the final float voltage to 4.2V. A precision internal resistor divider at this pin sets the float voltage, which is disconnected in shutdown mode.

VCC (Pin 4): Positive Input Supply Voltage. This pin supplies power to the charger. VCC can vary between 4V **and** 9V **and should be bypassed** with at least a **1ÿF** capacitor. When VCC drops to within 30mV of the BAT **pin voltage ,** the TP4057 **enters shutdown mode, which reduces** IBAT to **To** below **2ÿA .**

STDBY **(Pin 5): Battery charging completion indication terminal. When the battery is fully charged, STDBY is pulled low by the internal switch, indicating that charging is complete. In addition, the STDBY pin will be in a high impedance state.**

PROG (Pin 6): Charge current setting, charge current monitoring and shutdown pin. Connecting a **1% precision resistor** RPROG **between this pin and ground can set the charge current. When charging in constant current mode, the voltage of the pin is maintained at** 1V.

The PROG **pin can also be used to shut down the charger. Disconnecting the set resistor to ground causes an internal** 2.5ÿA **current to pull** the PROG pin high. When the voltage on this pin reaches the shutdown threshold voltage of 2.7V , **the charger enters shutdown mode, charging stops, and the input supply current drops to 40ÿA. Reconnecting RPROG to ground will restore the charger to normal operation.**

Machine Translated by Google

Block Diagram

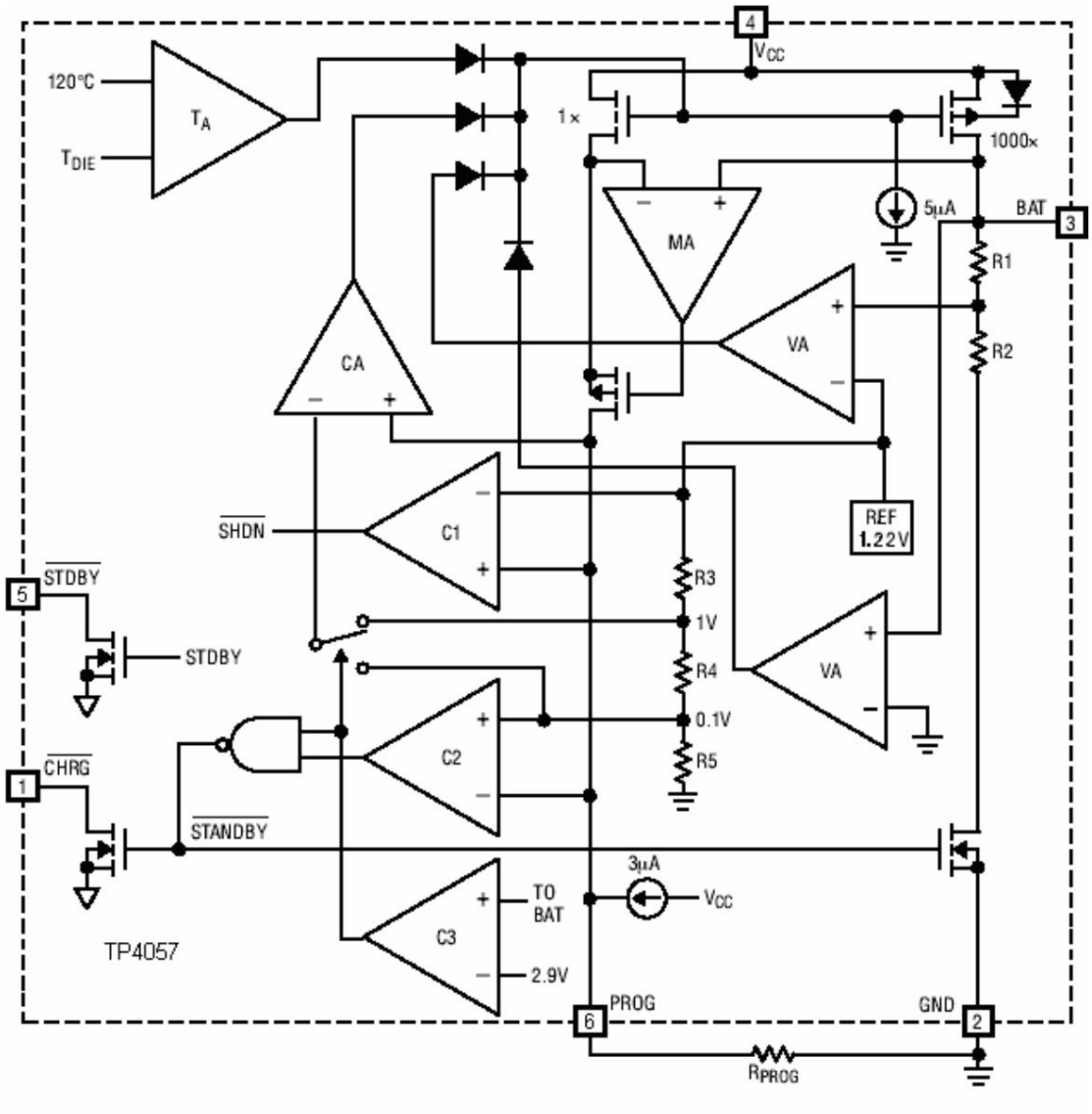

Machine Translated by Google

How it works

TP4057 is a constant current/constant voltage single-cell Li-Ion battery charger. 500mA charging current (with a well-designed PCB layout) and an internal P- channel power MOSFET No isolation diode or external current sense circuit is required. The basic charger circuit therefore requires only two external components. Not only that, TP4057 can also be from a The USB power supply obtains the working power.

Normal charging cycle

When the Vcc pin voltage rises to the UVLO threshold level, and connect a precision 1% setting resistor or when a battery is connected to the charger input When the output terminals are connected, a charging cycle begins . When the pin level is lower than 2.9V, the charger enters trickle charging In this mode, TP4057 provides about 1/10 of the setting Determine the charging current to increase the current voltage to a safe level level, thereby achieving full current charging.

When the BAT pin voltage rises above 2.9V , charging The device enters constant current mode, which provides a constant current to the battery. Charging current. When the BAT pin voltage reaches the final floating charge When the voltage is 4.2V, TP4057 enters the constant voltage mode. And the charging current begins to decrease. When the charging current drops to the set value 1/10 of the charge cycle is completed.

Charging current setting

The charging current is connected between the PROG pin and ground. The resistor between the setting resistor and the charging The flow is calculated using the following formula: Determine the resistor value according to the required charging current.

Formula 1: $R_{PROG} \quad \frac{1000}{I_{BAT}}$ (IBATÿ0.3A)

Example 1: When the charging current needs to be set to IBAT = 0.2A , Calculated using formula 1:

$$RPROG \quad \frac{1000}{0.2} \quad 5000 \quad (ÿ)$$

That is, RPROG = 5kÿ

Formula 2:

$$R_{PROG} \quad \frac{1000}{I_{BAT}} \quad 1.3 \quad I_{BAT} \quad (IBAT>0.3A)$$

In applications greater than 0.3A , the chip heat is relatively large. Over-voltage protection will reduce the charging current. The test current and The theoretical value calculated by the formula is also not completely consistent. Customer Application In the example, you can select the appropriate size of RPROG according to your needs.

The relationship between RPROG and charging current can be determined by referring to the following table:

RPROG (k)	IBAT (mA)
20k	50
10k	100
5k	200
4k	250
3k	300
2k	400
1.6k	500

Charge Termination

When the charge current drops after reaching the final float voltage When the value reaches 1/10 of the set value , the charging cycle is terminated.

The device is achieved by using an internal filter comparator The PROG pin is monitored to detect . When the voltage drops below 100mV for more t_{TERM} (general than 1.8ms, charging is terminated. The charging current is locked. TP4057 enters standby mode, at which time the input power current drops to 40ÿA. (Note: C/10 termination in trickle charge and thermal limiting mode).

When charging, transient loads on the BAT pin will cause The PROG pin voltage drops to the set value when the DC charging current 1/10 drops below 100mV briefly. Terminate comparison The 1.8 ms filter time (t) on the $_{TERM}$ The transient load will not cause the charge cycle to terminate prematurely. Once the average charging current drops below 1/10 of the set value, TP4057 terminates the charging cycle and stops charging through the BAT pin. In this state, the BAT pin All loads must be powered by batteries.

In standby mode, TP4057 responds to the BAT pin voltage If the voltage on this pin drops to 4.1V, *If the recharge threshold (VRECHRG)* is below, another charging The cycle begins and current is supplied to the battery again. When manually restarting the charging cycle in Then apply the input voltage, or the charger must be shut down and Use the PROG pin to restart. Figure 2 shows a State diagram of a typical charging cycle.

Battery reverse polarity protection function

TP4057 has lithium battery reverse connection protection function. The positive and negative poles of the battery are reversely connected to the TP4057 current output pins. TP4057 will shut down and display a fault status with no charging current.

Machine Translated by Google

Both charging indicator pins are in high impedance state, and both LED lights are off. At this time, the leakage current of the reverse-connected lithium battery is less than 0.8mA. Connect the reverse-connected battery correctly, and the TP4057 automatically starts the charging cycle.

If the capacitor potential of the BAT pin at the output end of TP4057 is still negative, the TP4057 indicator light will not light up normally immediately. Only when the battery is correctly connected can the charging be automatically activated. Or wait for a long time for the negative potential of the capacitor at the BAT end to be discharged, and the BAT end potential is greater than zero volts, TP4057 will display the normal no-battery indicator light state.

In the case of reverse connection, the power supply voltage should be around the standard voltage of 5V and should not exceed 8V. If the power supply voltage is too high, the chip voltage difference will exceed 10V in the case of reverse connection of the battery voltage, so the power supply voltage should not be too high in the case of reverse connection.

Charge Status Indicator (CHRG STDBY)

TP4057 has two open-drain status indication outputs

When the charger is in charging state, CHRG is pulled to low level, in other states, CHRG is in high impedance state. When the battery is not connected to the charger , CHRG outputs a pulse signal to indicate that the battery is not installed. When the external capacitor of the battery connection terminal BAT pin is 10uF, the CHRG flashing period is about 0.5-2 seconds.

When the status indication function is not used,

The output terminal is connected to ground.

Charging status	red light CHG	Green Light STDBY
Battery fully charged Off	On Off Charging status	
On Battery reverse connection, power supply undervoltage Off		

There are three options for the no-battery connection indicator status:

No battery standby state	Red light green light	
Application 1: BAT connected to a 10U electrolytic	Flashing	
capacitor Application 2: BAT terminal connected to a 100k resistor to the	Destroy	Bright
power supply (see P12) Application 3: Add a 5k resistor to the BAT terminal to the power supply (that is, replace the above 100k with	Both lights are off	

a 5k resistor. See P12) Note: When the BAT terminal is connected to the power supply with a 5k resistor, the power supply will charge the battery through the resistor, with a size of about 0.2mA. Such a small

Even if the battery is not removed in time after it is fully charged, it will not cause damage to the battery such as overcharging.

Thermal Limitation

An internal thermal feedback loop will reduce the set charge current if the chip temperature attempts to rise above a preset value of approximately 120°C. This feature prevents the TP4057 from overheating and allows the user to increase the upper limit of a given board's power handling capabilities without risking damage to the TP4057 . The charge current can be set based on typical (rather than worst-case) ambient temperature with the assurance that the charger will automatically reduce the current under worst-case conditions. SOT power considerations are further discussed in the Thermal Considerations section.

Undervoltage Lockout

An internal undervoltage lockout circuit monitors the input voltage and keeps the charger in shutdown mode until Vcc rises above the undervoltage lockout threshold. The UVLO circuit will keep the charger in shutdown mode. If the UVLO comparator is tripped, the charger will not exit shutdown mode until Vcc rises 50mV above the battery voltage .

Manual stop

The TP4057 can be placed in shutdown mode at any time during the charge cycle by removing RPROG (thus floating the PROG pin). This reduces the battery drain current to less than 2ÿA and the supply current to less than 50ÿA . Reconnecting the set resistor can start a new charge cycle. Figure 1 uses NMOS tube shutdown to float the PROG pin.

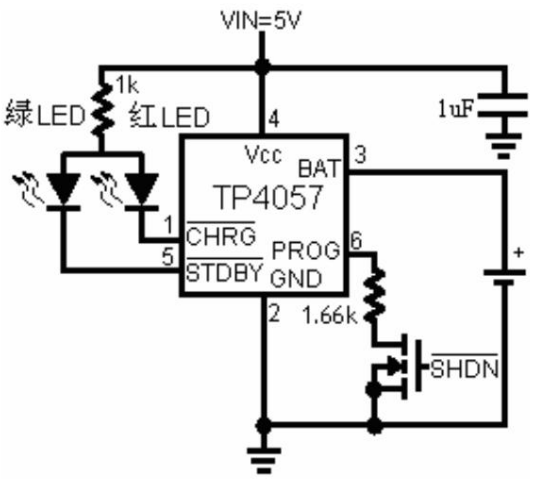

Figure 1: Signal-controlled charging circuit

Automatic restart

Once the charge cycle is terminated, the TP4057 immediately adopts

Machine Translated by Google

A filter with 1.8ms time (t *RECHARGE*)

The comparator continuously monitors the voltage on the BAT pin.

The battery voltage drops to 4.1V (roughly corresponding to the battery capacity).

When the battery level drops below 80% to 90%, the charge cycle restarts.

This ensures that the battery is maintained at (or close to) a full charge.

state and eliminates the need for periodic charge cycle initiation

During the recharge cycle, the $\overline{CHRG}$ pin outputs

Re-enter a strong pull-down state, the $\overline{STDBY}$ pin outputs

Re-enter a high-impedance state.

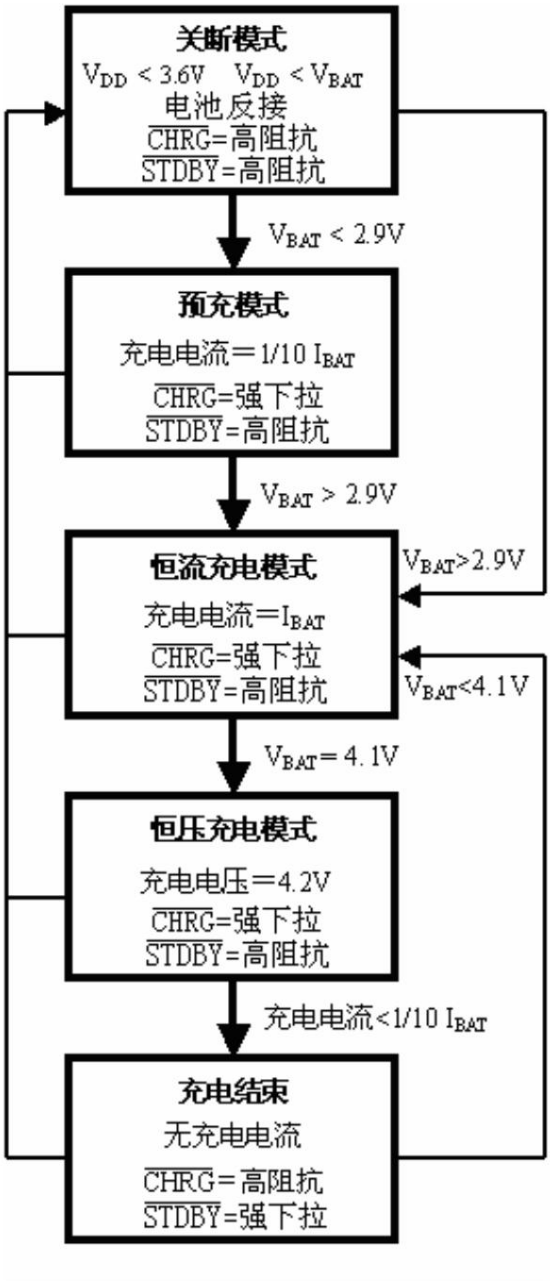

Figure 2: State diagram of a typical charging cycle

Stability considerations

As long as the battery is connected to the output terminal of the charger, the constant current

The voltage mode feedback loop can be operated without an external

When no battery is connected,

To reduce the ripple voltage, an output capacitor is recommended.

When using large value low ESR ceramic capacitors, it is recommended

Add a **1ÿ resistor in series with the capacitor .**

If tantalum capacitors are used, no series resistor is required.

In constant current mode, the feedback loop is

PROG **pin instead of the battery. Constant current mode**

The quality is affected by the PROG pin **impedance.**

No additional capacitance on the pin will reduce the maximum setting resistor

The pole frequency on the PROG pin should be kept at

CPROG, **the maximum current of** RPROG **can be calculated by the following formula:**

Resistance:

$$R_{PROG} \quad \frac{1}{2p10^{5} \quad C_{PROG}}$$

For users, they may be more interested in charging current, not transient current. For example, if a running

In low current mode, the switching power supply is connected in parallel with the battery, then

The average current flowing out of the BAT pin is usually larger than the transient current pulse.

In this case, the PROG **pin**

A simple RC filter is used to measure the average current

The PROG **pin and** the **filter**

A 10k **resistor was added between the capacitors** to ensure stability.

Qualitative.

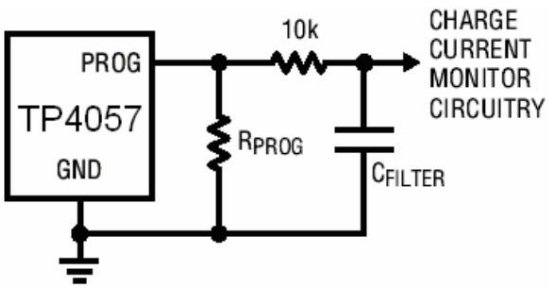

Figure 3: Isolating capacitive loads on the PROG pin

And filter circuit

Power loss

TP4057 **reduces charging current due to thermal feedback**

The condition can be estimated by the power loss in the IC .

The power loss is almost entirely caused by the internal MOSFET

This can be approximated by the following formula:

$$P_D(V_{CC} - V_{BAT})I_{BAT}$$

Where PD **is the dissipated power and VCC is the input power supply voltage.**

voltage, VBAT is the battery voltage, and IBAT is the charging current.

The ambient temperature at which **feedback begins to protect** the IC is approximately:

$$T_A = 120^{\circ}C - P_D q_{JA}$$

$$T_A = 120^{\circ}C - (V_{CC} - V_{BAT})I_{BAT}\, q_{JA}$$

Machine Translated by Google

Example: A TP4057 **that is powered** from a 5V USB power supply **is programmed** to provide 400mA **full amplitude current to a discharged lithium-ion battery with a voltage of** 3.75V . Assuming *qJA is* **150ÿ/W (see board layout considerations),** the ambient temperature when the TP4057 **begins to reduce the charge current is approximately:** *TA 120C(5V* 3.75V) (400mA)150C/W *TA* 120C 0.5W *150C/ W* 120C 75C

TA 45C The TP4057 **can be used at an ambient temperature above 45ÿ, but the charge current will be reduced to** less than 400mA . **For a given ambient temperature, the charge current can be approximated by the following formula:**

$$I_{BAT} \quad \frac{120\ CT_{A}}{(V_{CC} \quad V_{BAT})\ q_{JA}}$$

Consider the previous example again with an ambient temperature of 60°C. The charging current will be reduced to approximately:

$$I_{BAT} \quad \frac{120\ 60\ C}{150\ C/W\ (5\ 3.75)} \quad \frac{60\ C}{187.5\ /CA}$$

$$I_{BAT} \quad 320\ mA$$

Furthermore, as discussed in the Theory of Operation section, when thermal feedback reduces the charge current, the voltage on the PROG pin will also decrease proportionally.

It is important **to remember that you do not need to consider worst-case thermal conditions in** your TP4057 **application design, because the** IC **will automatically reduce power dissipation when the junction temperature reaches approximately 120°C.**

Thermal considerations Due to the small size of the SOT23-6 package, **poor heat dissipation in high current applications (above 400mA) may cause the charging current to be reduced due to temperature protection. Please design the thermal dissipation resistor according to the actual power supply voltage. The chip** Vcc **input voltage is best** at 4.6V , which can obtain a larger charging current. The general thermal dissipation resistor is 0.5 **to** 1 **ohm. It is also important to use a thermally well-designed** PC **board layout to maximize the available charging current. The heat dissipation path used to dissipate the heat generated by** the IC runs from the chip to the lead frame and reaches the copper surface of the PC **board through the peak back leads (especially the ground lead). The copper surface of the PC board is a heat sink. The copper foil area connected to the pins should be as wide as possible and extend outward to a larger copper area to dissipate the heat to the surrounding environment. Vias to the internal or back copper circuit layer are used to improve the charger.**

The overall thermal performance is also useful. When designing the PC board layout, other heat sources on the board that are not related to the charger must also be considered because they will affect the overall temperature rise and maximum charge current. The following table lists the thermal resistance for several different board sizes and copper areas. All measurements were made on a 3/32" FR-4 board **in still air with the device mounted on the top side.**

表 1：实测热阻 (双层电路板*)

铜面积		电路板面积	结点至环境热阻
顶面	底面		
2500mm²	2500mm²	2500mm²	125°C/W
1000mm²	2500mm²	2500mm²	125°C/W
225mm²	2500mm²	2500mm²	130°C/W
100mm²	2500mm²	2500mm²	135°C/W
50mm²	2500mm²	2500mm²	150°C/W

*每层采用1盎司铜箔

表 2：实测热阻 (四层电路板)**

铜面积 (每面)	电路板面积	结点至环境热阻
2500mm²***	2500mm²	80°C/W

** 顶层和底层采用 2 盎司铜箔，内层采用 1 盎司铜箔。
*** 总铜面积为 10,000mm²

VCC bypass capacitor

Input bypassing can use a variety of capacitor types. However, caution must be exercised when using multilayer ceramic capacitors. Because some types of ceramic capacitors are self-resonant and have high Q values, they can generate high voltage transients under certain startup conditions (such as connecting the charger input to a live power supply). Electrolytic or tantalum capacitors are recommended.

Charge current soft start

The TP4057 includes a soft-start circuit to minimize inrush current at the start of a charge cycle. When a charge cycle is initiated, the charge current will rise from 0 to full scale in about 20mS. This minimizes the transient current load on the power supply during startup.

$\overline{\text{CHRG}}$ **status output pin**

When a discharged battery is connected to the charger, the constant current portion of the charge cycle begins and the $\overline{\text{CHRG}}$ **pin is pulled to ground.** The $\overline{\text{CHRG}}$ **pin is capable of sinking up to 10mA to drive a current that indicates the charge cycle is in progress.**

Machine Translated by Google

When the battery is nearly fully charged, the charger enters the constant voltage portion of the charge cycle and the charge current begins to decrease. When the charge current drops to less than 1/10 of the set current, the charge cycle ends and the strong pull-down high impedance state replaces it, indicating that the charge cycle has ended. The CHRG pin will also become high impedance if the input voltage is removed or drops below the undervoltage lockout threshold. Using a pull-up resistor, a microprocessor can detect these two states from this pin, as shown in Figure 4.

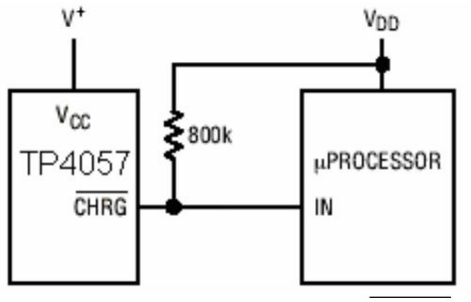

Figure 4: Using a microprocessor to determine the state of the CHRG pin To detect when the TP4057 is in charging mode, an N-channel MOSFET pulls the pin low with a 100k pull-up resistor . When the cycle is terminated, the N-channel MOSFET is turned off, the CHRG pin is high impedance, and the IN pin is then pulled high by the 100k pull-up resistor. Of course, in the case of undervoltage lockout, the IN pin will also be pulled high when the input voltage is insufficient, indicating that the device is in a UVLO state.

Input voltage reverse polarity protection

In some applications, reverse polarity voltage protection is required on VCC. If the supply voltage is high enough, a series blocking diode can be used. In other cases where the dropout voltage must be kept low, a P- channel MOSFET can be used (as shown in **Figure** 5).

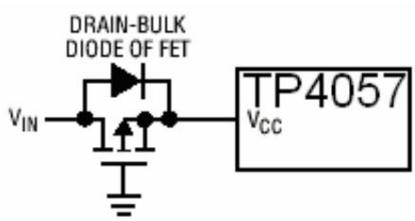

Figure 5: Low-loss input reverse polarity protection

Package Description

S5 package

5-pin plastic SOT-23-5 package

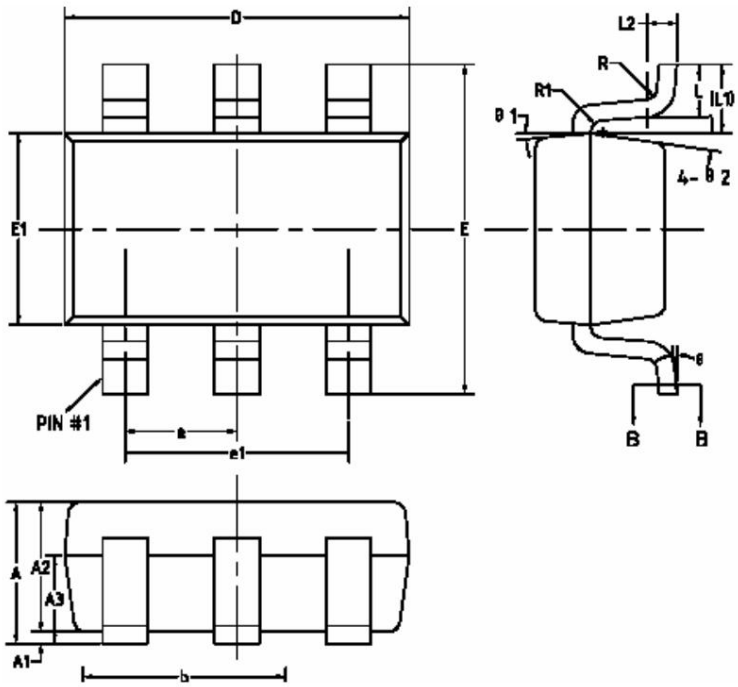

COMMON DIMENSIONS
(UNITS OF MEASURE=MILLIMETER)

SYMBOL	MIN	NOM	MAX
A	–	–	1.25
A1	0	–	0.15
A2	1.00	1.10	1.20
A3	0.60	0.65	0.70
b	0.36	–	0.50
b1	0.36	0.38	0.45
c	0.14	–	0.20
c1	0.14	0.15	0.16
D	2.826	2.926	3.026
E	2.80	2.80	3.00
E1	1.526	1.626	1.726
e	0.95BSC		
e1	1.90BSC		
L	0.35	0.45	0.60
L1	0.59REF		
L2	0.25BSC		
R	0.10	–	–
R1	0.10	–	0.20
θ	0°	–	8°
θ1	3°	5°	7°
θ2	6°	8°	10°

Machine Translated by Google

Typical Applications

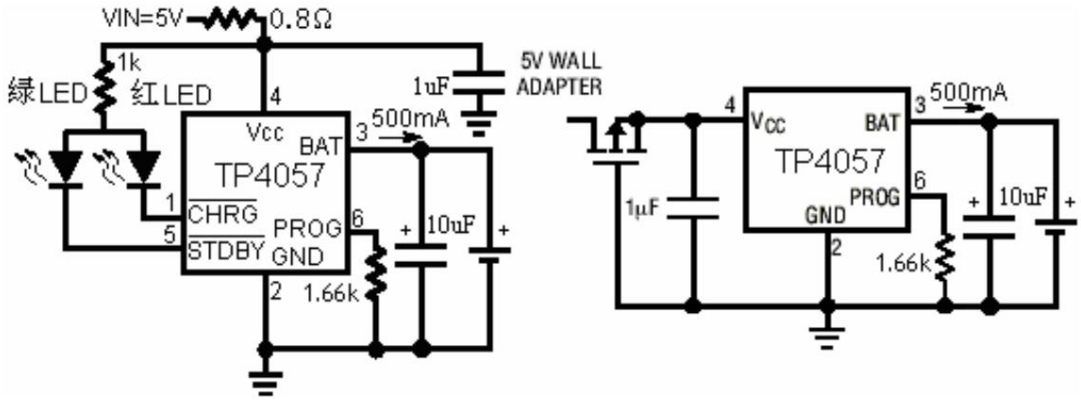

Full-featured single-cell lithium battery charger (connect dissipation resistor) Charger with input reverse polarity protection

(Green light on and red light flashing when no battery)

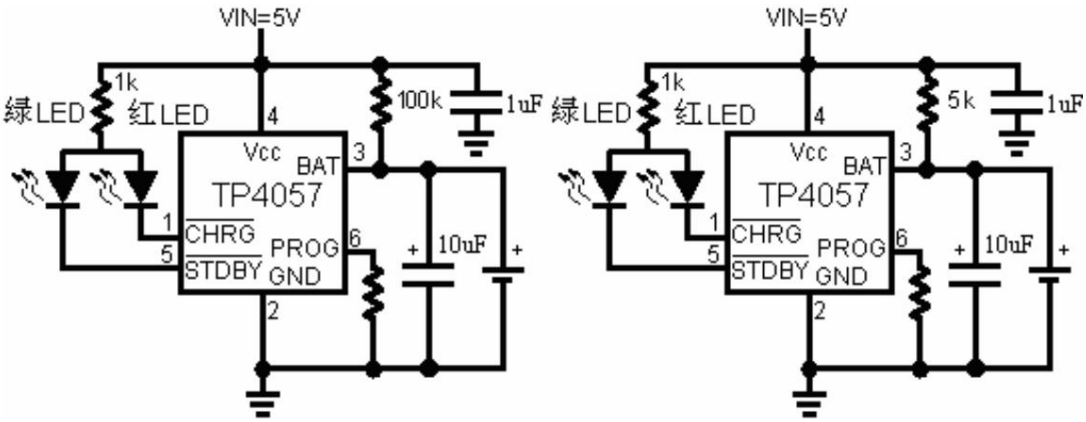

No flashing light without battery Single-cell lithium battery charger No battery and both lights off Single-cell lithium battery charger (green light on and red light off without battery, does not affect other status indications)

TP4057 Test and Use Precautions

1. **During the TP4057 test, the chip** BAT **terminal (pin 3) should be directly connected to the positive electrode of the battery, not in series. Amperemeter, the amperemeter can be connected to** the Vcc **terminal of the chip.**

2. **To ensure reliable use in various situations and prevent chip damage caused by spike and glitch voltage, it is recommended In** TP4057 applications, the VIN **terminal and** BAT **terminal are connected to** 1uF **and** 10uF electrolytic capacitors respectively. If possible, a 0.1u ceramic capacitor **can be connected to each terminal. All capacitors should be placed close to the chip pins, not too far away.**

3. **Using** SOT23 package, **poor heat dissipation in high current applications (above 400mA)** may cause the charging current to be reduced due to temperature protection. Customers can choose not to connect the dissipation resistor. If the current cannot meet the requirements, please design the thermal dissipation resistor according to the actual power supply voltage. The chip Vcc **input voltage is best at** 4.6V , **which can obtain a larger charging current. The general thermal dissipation resistor is** 0.5 **to** 1 **ohm. Similarly, a good** PCB **board layout can effectively reduce the impact of temperature on current in customers' high current charging applications.**